GYMNASTICS • MARTIAL ARTS

NORBERTS
WWW.NORBERTS.NET

CHEERLEADING • STUNTWORK

PRODUCT INFORMATION

ADJUSTABLE WALLMOUNT BALLET BARRE SPECIFICATION

READ THIS DOCUMENT AND ALL OTHER ACCOMPANYING PRODUCT DOCUMENTATION THOROUGHLY BEFORE INSTALLING, USING OR PERMITTING USE OF THIS EQUIPMENT. REQUIRE ALL PERSONS INTENDING TO USE THIS EQUIPMENT, AS WELL AS THOSE INSTRUCTING, ASSISTING OR COACHING OTHERS IN THE USE OF THIS PRODUCT, TO READ THIS DOCUMENT THOROUGHLY BEFORE AUTHORIZING THEM TO ENGAGE IN THOSE OR RELATED ACTIVITIES.

1-7/8"diameter poplar barres are hand-sanded and shipped--ready to use--in individual cardboard tubes.

Adjustable Ballet Barre Brackets are very sturdy and weigh 2 1/2 lb. each. (Double adjustable weigh 3 1/2 lb.) They have a bright chrome finish. They come with #12 x 2" flat head screws. Wall channel allows approximately 14" of adjustment.

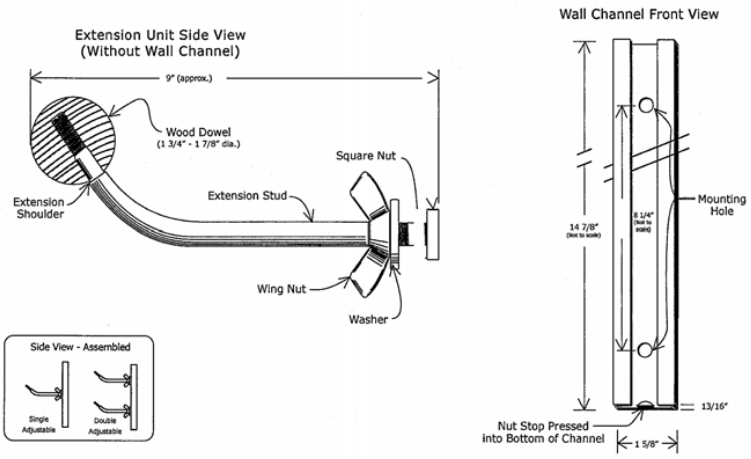

RECOMMENDED SPACING FOR BRACKETS

4' Barre	2 brackets spaced 32" apart (8" overhang)
6' Barre	2 brackets spaced 48" apart (12" overhang)
8' Barre	2 brackets spaced 64" apart (16" overhang)
10' Barre	2 brackets spaced 80" apart (20" overhang)
14' Barre	3 brackets, 1 centered with 64" space on each side (20" overhang)

80" maximum span between brackets for 1 7/8" diameter barres. Minimum overhang is 2". Maximum overhang is 20". Use no more than three adjustable brackets per barre; it is harder to adjust barres that have more than three brackets.

SUGGESTED BARRE HEIGHTS FOR ADJUSTABLE BRACKETS

Place brackets to permit barre height adjustments from 30" - 44" (approx.)
Distance from wall to barre: INSIDE = 7 1/2" (approx.) OUTSIDE = 9" (approx.)
All dimensions are approximate and may change without notice.

Warp tolerance is 3/16" per 4' section. Please also see Barre Measuring & Tolerance Specifications

⚠ IMPORTANT CONSUMER PRODUCT HAZARD WARNING — PLEASE READ!

A possibility of serious injury, including paralysis or death, is inherent in any activity involving motion or height. Equipment with which this notice is included is intended for use only by properly trained, qualified persons under supervised conditions. Use without proper supervision is dangerous and should not be undertaken or permitted. Know your limitations as well as the limitations of your equipment. Consult a qualified instructor before attempting any new activity or skill. This equipment must be used with proper mats, spotting equipment and qualified spotters for each activity or skill. Use this equipment only for its intended purpose. Do not modify equipment in any way. Inspect each component for damage, loose fittings or signs of wear before each use. Do not use if you have any concern as to the condition of this equipment. Test unit for stability prior to each use. Do not use if you have any concern about the stability, condition or suitability of this equipment. Inspect warning labels and replace when marred or damaged. Before each subsequent use, re-check equipment stability and settings.